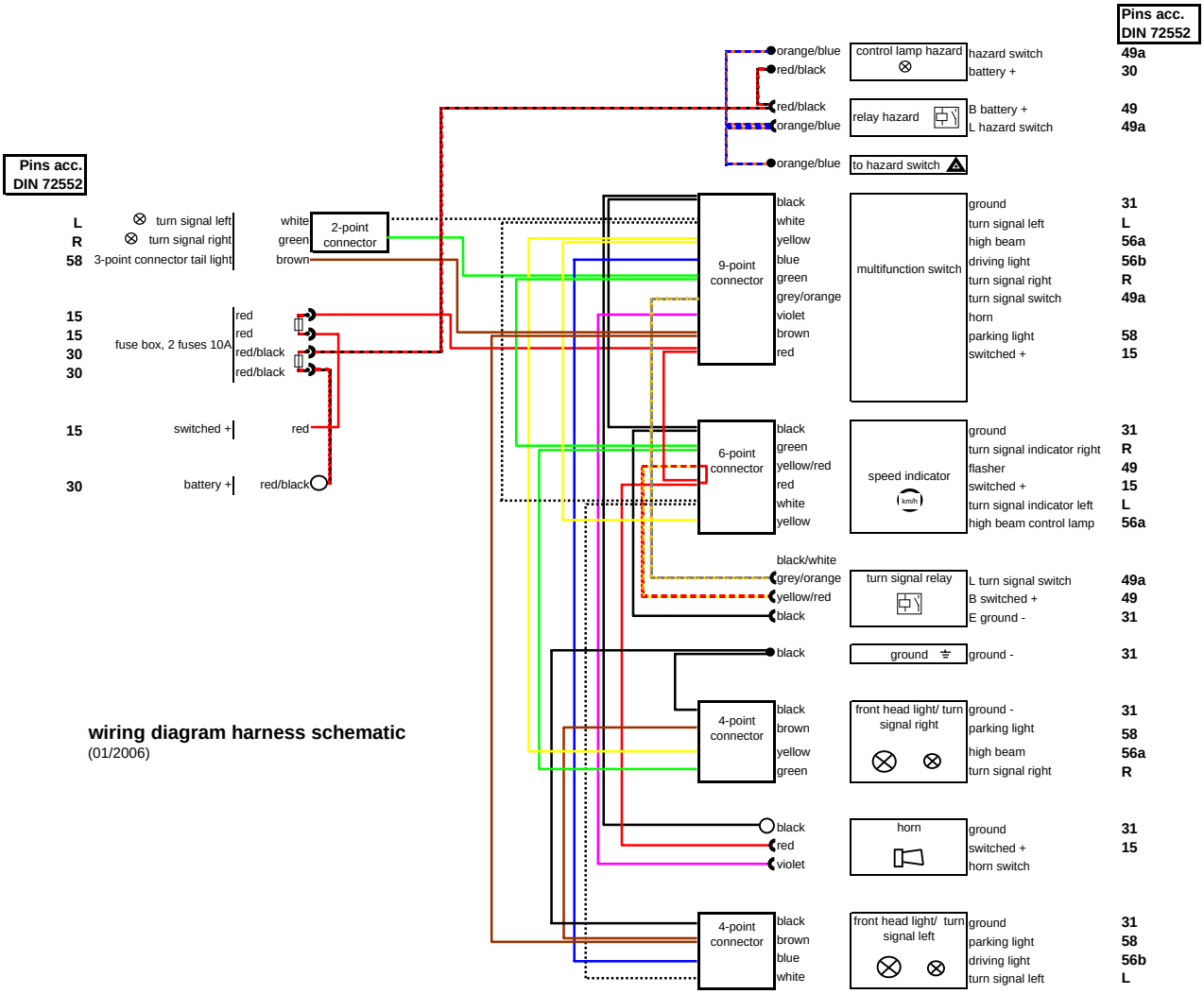

wiring diagram harness schematic
(01/2006)